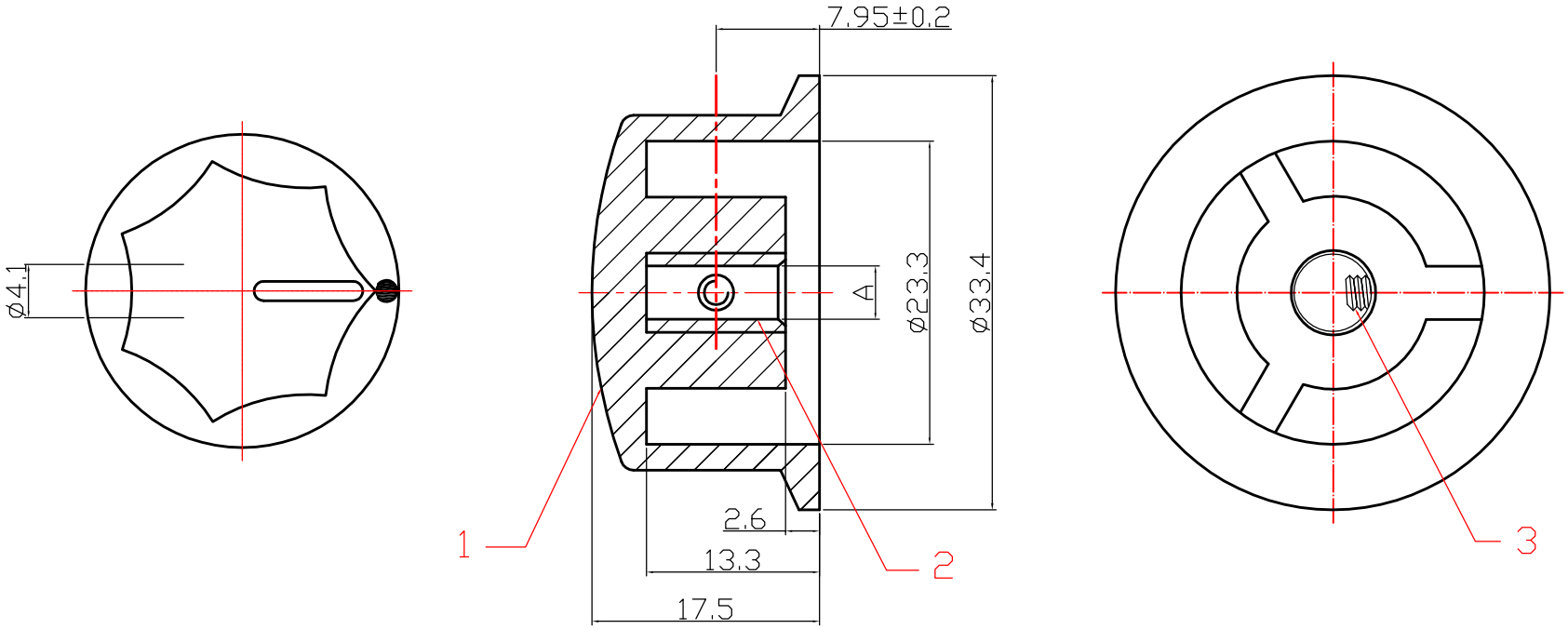

3	SCREW 4X8	BRASS							
2	SHAFTHOLE	BRASS		TOLERANCE	SIGNATURES		DATE	VITALCO	
1	HOUSING	BAKLITE,BLACK		0 - 10 ±0.05 10 - 99 ±0.5 100 - 999 ±10.0 1000 - 9999 ±100.00 10000 - 99999 ±1000.00	DRAFT:		10-12-2011		
ITEM	DESIGNATION	MATERIAL			CHECKEO:				
REV	PART NO.& SAMPLE NO.	DATE	BY		APPROVAL:			TITLE	Knobs,Bakelite
A	**#9565**			SHEET	SCALE	UNIT	REV		
B				OF	1:1	mm	ø	CUSTOMER	